# Air Conditioner

## Wiring Diagram

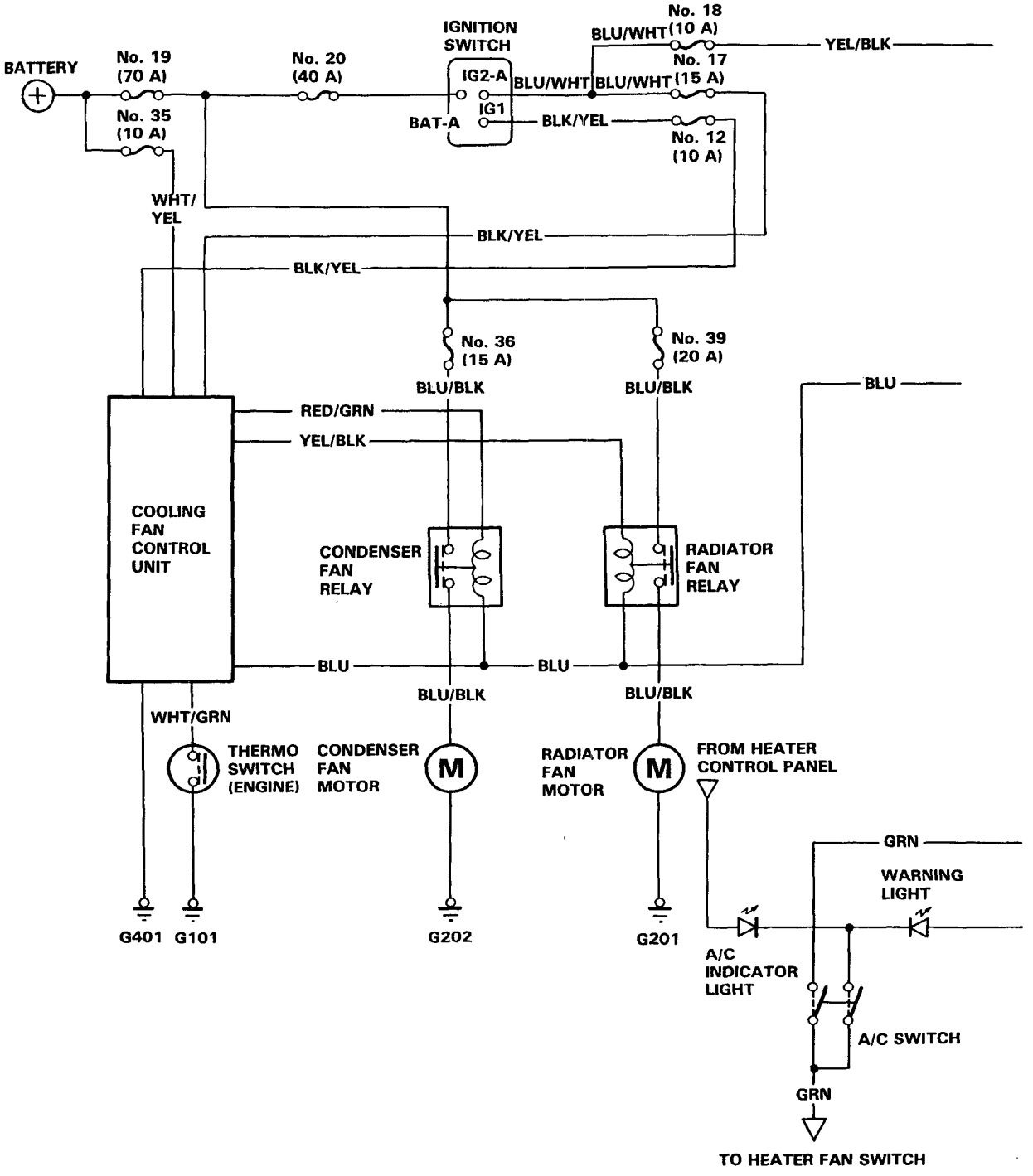

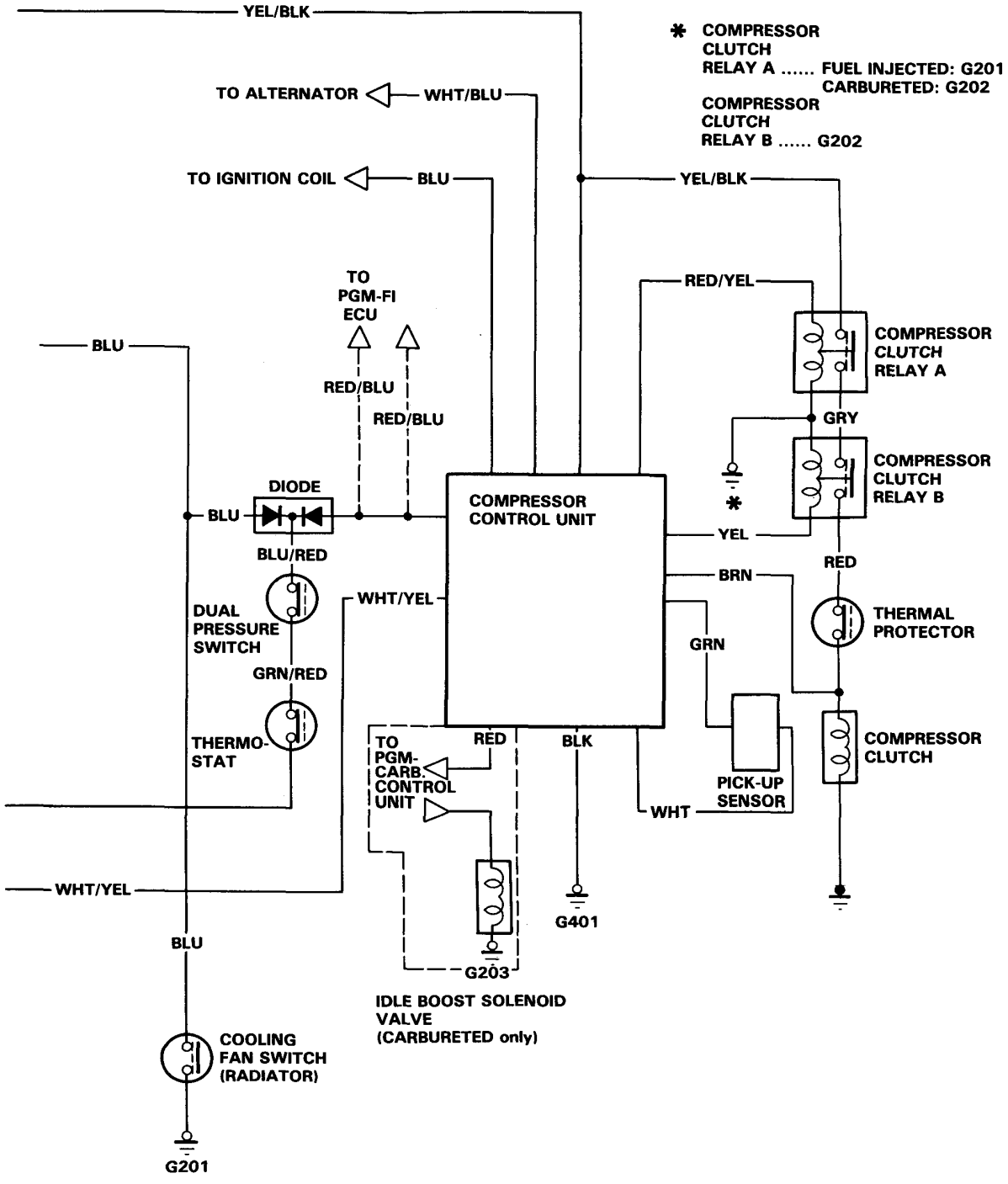
YEL/BLK
* COMPRESSOR CLUTCH RELAY A ..... FUEL INJECTED: G201
CARBURETED: G202
COMPRESSOR CLUTCH RELAY B ..... G202
TO ALTERNATOR
WHT/BLU
TO IGNITION COIL
BLU
YEL/BLK
TO PGM-FI ECU
RED/YEL
BLU
RED/BLU
RED/BLU
COMPRESSOR CLUTCH RELAY A
GRY
COMPRESSOR CLUTCH RELAY B
DIODE
BLU
COMPRESSOR CONTROL UNIT
*
YEL
BLU/RED
RED
BRN
WHT/YEL
DUAL PRESSURE SWITCH
THERMAL PROTECTOR
GRN
GRN/RED
THERMO-STAT
TO PGM-CARB. CONTROL UNIT
RED
BLK
COMPRESSOR CLUTCH
PICK-UP SENSOR
WHT
WHT/YEL
G401
BLU
G203
IDLE BOOST SOLENOID VALVE (CARBURETED only)
COOLING FAN SWITCH (RADIATOR)
G201